How to mark RCM on your product

According to AS/NZS 4417.1:2012, the RCM shall be placed on the external surface of the equipment as near as practical to the Model Number. Where it is not practical to achieve the placement of the RCM of a minimum shape owing to the size and nature of the equipment, then labelling or marking of the packaging with the RCM is permissible. Reproduction shall be legible with normal or corrected to normal vision and **shall be at least 3mm in height (H in figure below).**

The RCM may be applied to equipment using a built-in display. The documentation that accompanies the equipment when it is supplied to the user shall set out a method for displaying the RCM. The RCM may be reproduced in any colour.

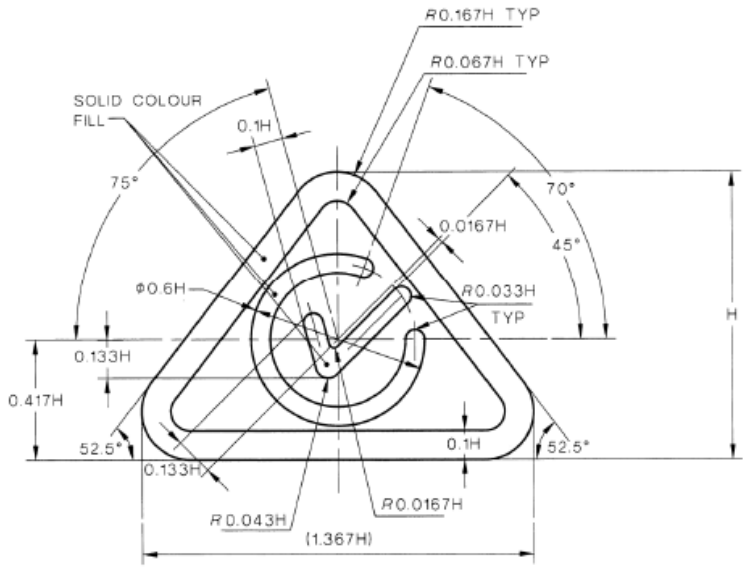

For more specific details, please refer to AS/NZS 4417.1:2012,Use of RCM.

如何使用 RCM 标识

RCM 标识需要被标记在产品的上，一般表在产品铭牌上，最可能靠近产品型号的地方。除非因产品的大小，，不能标记合适大小的 RCM 标识(上图中 H 不能少于 3mm)，在不得已的情况下可在产品包装上标记 RCM。另外，RCM 标识也可以应用与内置显示屏的产品标识中，但需要有相关文件来描述这种标识的方式。以下是 AS/NZS4417 中对 RCM 尺寸的规定。备注： RCM 标记可以是任何颜色的。